Fellowes®

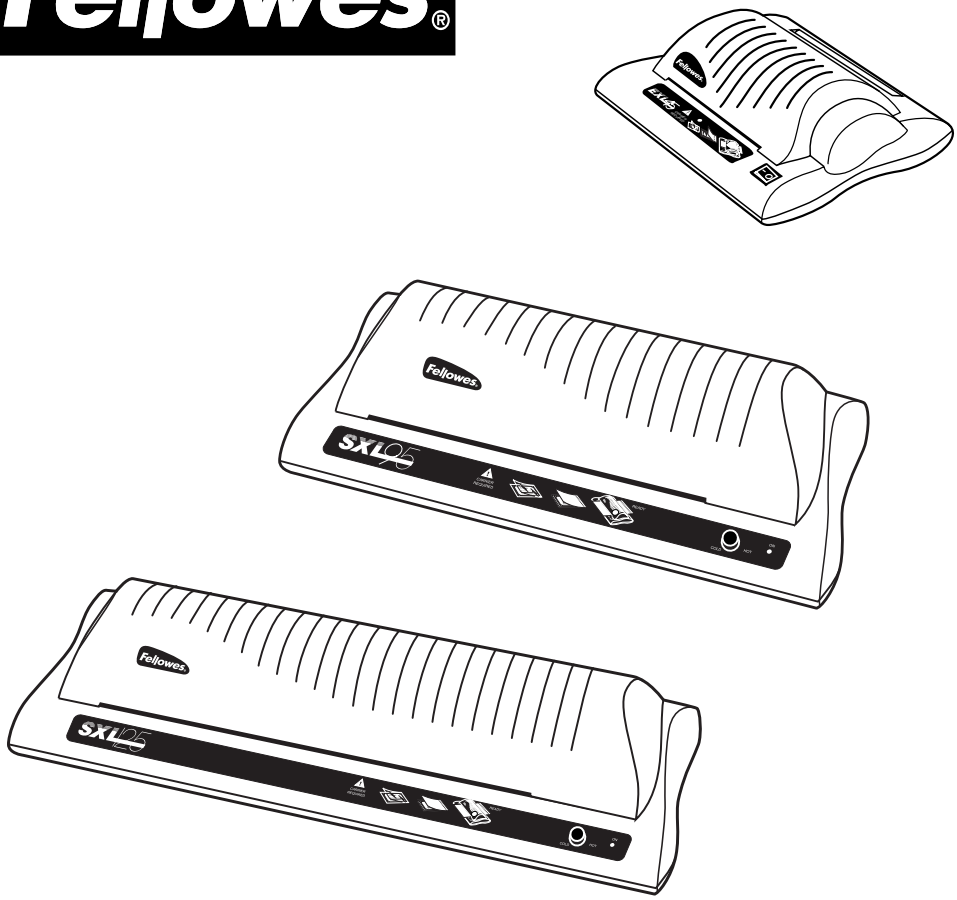

Operating Instructions

A

Mode d'emploi

B

Instrucciones de funcionamiento

C

Model / Modèle / Modelo:

EXL 45
SXL 95
SXL 125

Equipment Parts

1. Document Support
2. On/Off Switch
3. “Hot” Pouch Setting
4. Yellow On Light
5. “Cold” Pouch Setting
6. Green Ready Light

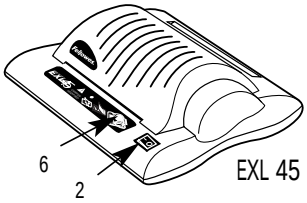

EXL 45

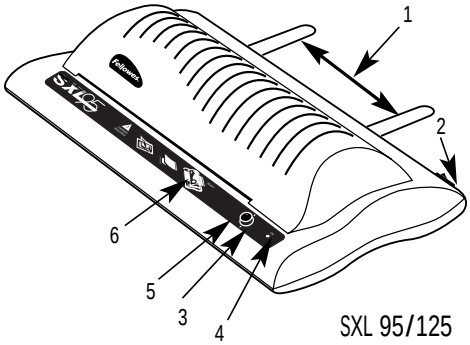

SXL 95/125

Safety Instructions

1. Read all instructions before use. Save these instructions for later use.
2. Follow all warnings and instructions marked on the product.
3. Use the Fellowes laminator only for its intended purpose of laminating documents according to the indicated specifications.
4. Extreme caution should be taken when the appliance is used by or near children or invalids.
5. Do not insert anything in the throat opening of the machine other than carriers with pouches/documents.
6. Do not attempt to remove jammed materials by poking objects into the laminator and particularly do not insert any metal objects such as a letter opener, knife, scissors, paper clips etc., into the laminator.
7. Do not service this product yourself. Opening/removing covers may expose you to dangerous voltage points or other risks, and may void manufacturer’s warranty.
8. Place unit in a secure, stable work area to prevent the machine from falling and possibly causing personal injury and damage to the laminator.
9. Wipe exterior only with a damp cloth only when unplugged. Do not use near water. Do not use detergents or solvents.
10. The laminator is intended for indoor use only.
11. Turn laminator off when not in use for an extended period of time.
12. Use laminator in close proximity to electrical outlet. Product must be easily accessible when plugged into outlet.

Electrical Safeguards

1. The pouch laminator must be connected to a supply voltage corresponding to the electrical rating of the machine as indicated.
2. Unplug the laminator before moving it, or when it is not in use for an extended period of time.
3. Do not let cord hang over edge of counter, or touch hot surfaces.
4. Do not operate the laminator with a damaged cord or plug, or after the laminator malfunctions, has been dropped or is damaged in any manner. Please call customer service at 1-800-945-4545 for information on repairs or adjustments.
5. Do not overload electrical outlets beyond their capacity as this can result in fire or electrical shock.
6. Do not alter attachment plug. Plug is configured for the appropriate electrical supply.

A

B

C

Operation

EXL 45

1. Place the laminator on a sturdy, flat work surface. Allow ample clearance behind the laminator for laminated items to exit completely.
2. Plug the laminator into a power source that matches the laminator's rate of voltage.
   NOTE: Fluctuating voltage may cause inconsistent lamination or mechanical problems with the laminator. If you suspect voltage problems, use a voltage stabilizer.
3. Turn power switch on.
   NOTE: During first usage, a small white puff of smoke may appear which is common to a new laminator.
4. Wait approximately 2-3 minutes for green ready light to illuminate. This indicates laminator is ready to use.
5. Place the item to be laminated into a Fellowes laminating pouch. Center the item for an even border; a border of approximately 1/8" (3mm) to 1/4" (6mm) is recommended.
6. Insert the pouch with the item into the carrier that is included with each carton of Fellowes pouches and with each machine.
7. Insert the carrier, sealed edge first, slowly into the front opening of the laminator until the carrier engages with the rollers.
   CAUTION: Do not try to force carrier into unit or try to pull from rear. This will damage the unit and will not allow for proper processing of the lamination.
8. The finished laminated item will automatically exit at the rear of the machine. After the carrier has stopped moving, place the carrier on a flat surface to cool for one minute before removing the finished pouch.
9. Turn the laminator off and unplug after completion of usage.
   CAUTION: WE DO NOT RECOMMEND LAMINATING PHOTOS ON THE "HOT" SETTING. The process of lamination permanently bonds the laminating pouch to the item being processed. If you are laminating a one of a kind item, we recommend that you test-laminate a similar type of material first. For best results always use Fellowes laminating pouches and carriers, and cold pouches for photos.

SXL 95/125

1. Follow Operation directions 1-3 for EXL 45.
2. Turn green dial to "hot" position.
3. Follow Operation directions 4-9 for EXL 45.

For Use With Cold Pouches (SXL 95/125 Only)

1. Follow machine operation instructions 1 and 2.
2. Turn green dial to "cold" position. If you have been using the machine in its hot mode, you will need to wait approximately 45 minutes for it to cool down.
   WARNING: Failure to do this may damage your machine.
3. Each pack of cold pouches includes a plastic leader with an adhesive strip. Fold back adhesive band protector on leader and attach leader to the sealed edge of the cold pouch.
4. Turn machine on.
5. Position the pouch so that the clear flap is facing downward. Insert pouch (leader first) into the machine until the rollers grab the leader (2-3 seconds). IMMEDIATELY TURN MACHINE OFF!
6. Drape adhesive pouch flap over the top of the laminator. Center document (face up) on top of clear flap. Pull off adhesive release paper, leaving this flap draped over machine.
7. Turn machine on. The finished laminated item will automatically exit the rear of the machine.
8. Turn the laminator off and unplug after completion of usage.

Specifications

	EXL 45	SXL 95	SXL 125
Electrical	120V	120V	120V
Machine Dimensions (L x W x H)	7-3/5x7-1/2x3-1/6” 193 x 190 x 80mm	14-3/4x7-1/8x4-1/3” 374 x 181 x 110mm	19-2/3x7-1/8x4-1/3" 500 x 181 x 110mm
Machine Weight	2.2 lbs. 1.0kg	4 lbs. 1.8kg	7.25 lbs. 3.3kg
Maximum Pouch Width	4” 102mm	9" 229mm	12" 305mm
Maximum Pouch Thickness	5mil	5mil	5mil
Maximum Card/Document Thickness	0.125” 3.175mm	0.0449” 1.14mm	0.0646” 1.64mm
Warm-Up Time	2-3 minutes	2-3 minutes	2-3 minutes

Limited Warranty

Fellowes Manufacturing Company warrants all Laminating Machines to be free from defects in material and workmanship for one year from the date of purchase by the original consumer. The exception to this are the rollers which are subject to wear. If any part is found to be defective during the warrant period, your sole and exclusive remedy will be repair or replacement, at Fellowes' option and expense, of the defective part.

This warranty does not apply in cases of abuse, mishandling or unauthorized repair. ANY IMPLIED WARRANTY, INCLUDING THAT OF MERCHANTABILITY OR FITNESS FOR A PARTICULAR PURPOSE, IS HEREBY LIMITED IN DURATION TO THE APPROPRIATE WARRANTY PERIOD SET FORTH ABOVE. In no event shall Fellowes be liable for any consequential or incidental damages attributable to this product. This warranty gives you specific legal rights. You may have other legal rights that vary from state to state.

For more detail or to obtain service under this warranty, please contact Fellowes Customer Service at 1-800-955-0959, Monday through Friday, 8 AM - 5 PM (Central Standard Time).

For specific instructions on obtaining service under this warranty on machines purchased outside the USA, contact the appropriate location listed on the back of this instruction manual.

Warrantor: Fellowes Manufacturing Company

A

B

C

Contact For Service
Vos Contacts Fellowes
Sus Contactos Fellowes

United States	1-800-955-0959
Australia	(In Melbourne) (03) 9330-3211
	(Outside Melbourne) 1-800-331-177
Canada	1-800-665-4339
United Kingdom	01302-885 331
Japan	+81-3-5496-2401
Benelux	+31-(0)347-377988
Italy	+39-071730041
Germany	+49-5131-49770
France	+33-(0)4-72-08-25-45

Fellowes® 1789 Norwood Avenue, Itasca, Illinois 60143-1095 630-893-1600 Customer Service 1-800-945-4545 http://www.fellowes.com

Australia	Benelux	Canada	France	France	Germany	Italy	Japan	United Kingdom
Tullamarine, Vic.	Vianen, NL	Markham, Ont.	Montanay	Rennes, I-L	Garbsen, Han.	Camerano, AN	Tokyo	Doncaster, S. Yorks.

Part No.

© 2000 Fellowes Part No. 70970.